# EZ I/O™ Combo Discrete and Analog Voltage Module

## EZRPL-IO-6DI4DO-2ANI2ANOV

- Combination Discrete I/O and Analog I/O Module
- 4 pt. Discrete Output and 6 pt. Diecrete Input
- 2 Analog Ouput independently selectable range (0-5V, ±5V, 0-10V, ±10V)
- 2 Analog Input independently selectable range (0-5V, ±5V, 0-10V, ±10V)

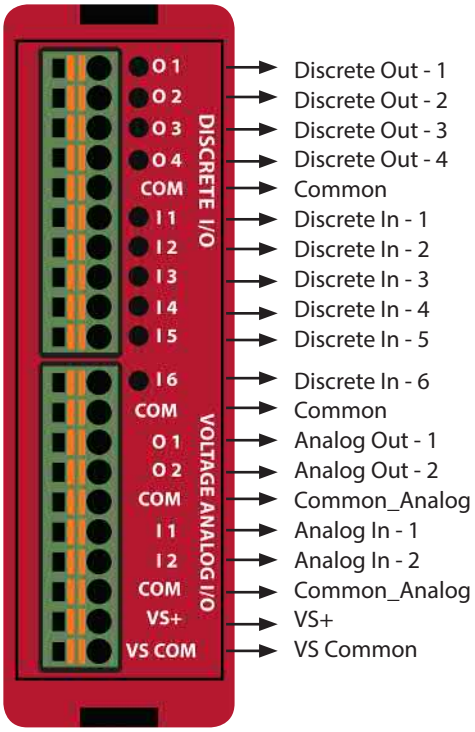


**DISCRETE OUTPUT**

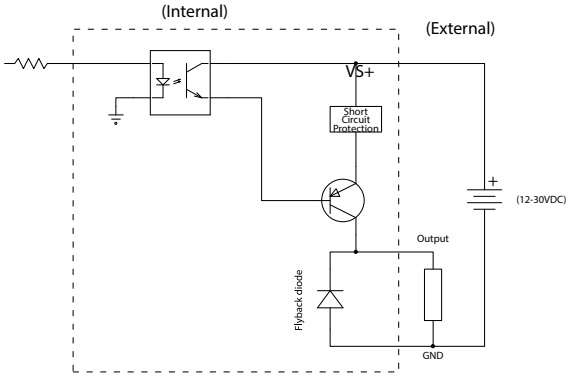


**DISCRETE INPUT (Source)**

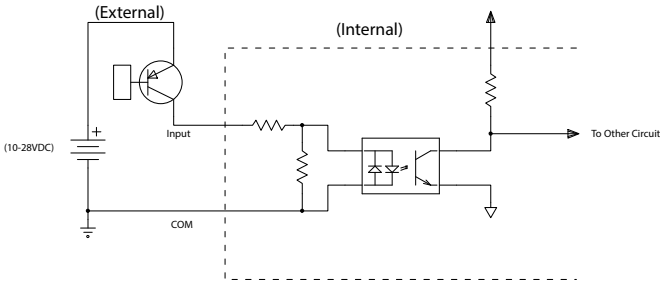


**DISCRETE INPUT (Sink)**

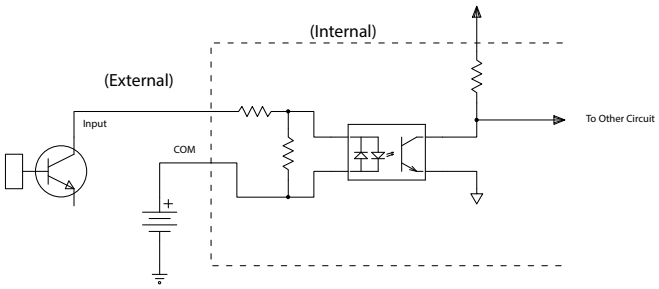


**Analog Output and Input**

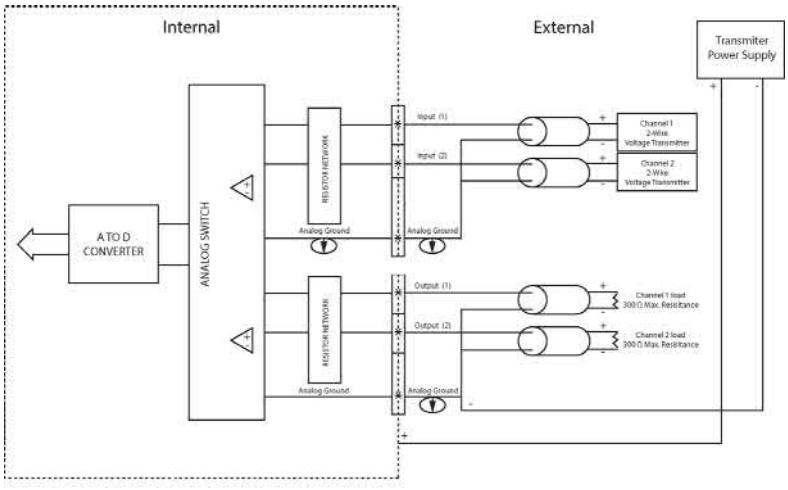


| Module Specifications | |
|---|---|
| *Operating Temperature* | -20 °C to 60 °C |
| *Storage Temperature* | -20 °C to 70 °C |
| *Relative Humidity* | 5 to 95 % |
| *Removable Terminal Block* | 300 Volt/8 Amp/ 14 AWG UL Rating |
| *Vibration* | MIL STD 810C 514.2 |
| *Shock* | MIL STD 810C 516.2 |
| *Noise Immunity* | NEMA ICS3-304 |

Proudly Made in America


Uticor AVG Pty Ltd T: 61 2 9482 4000
W: www.ezautomation.com.au
W: www.uticor.com

# EZ I/O™ Combo Discrete and Analog Voltage Module

## EZRPL-IO-6DI4DO-2ANI2ANOV

| Discrete Output Specifications | |
|---|---|
| *Number of Outputs* | 4 sourcing |
| *Output Voltage Range* | 11-30 VDC |
| *Peak Voltage* | 50 VDC |
| *Maximum Steady State Output Current* | 0.1A per output,<br>0.4A max per module @ 50°C |
| *Maximum Leakage Current* | 100µA @ 50 VDC @ 50°C |
| *ON Voltage Drop* | 2 VDC @ 0.5A |
| *Maximum Inrush Current* | 0.8A for 10ms |
| *OFF to ON Response* | < 2µs |
| *ON to OFF Response* | <10µs |
| *Status Indicators* | Red LED for each output |
| *+V Terminals & Commons* | One $V^+$, 3 Commons Separate |
| *Short Circuit Protection* | 1 Amp per module, turns off outputs upon short circuit detection |
| *Base Power Required (5V)* | 80mA, all outputs on |
| *Optical Isolation* | 2500 Volt |
| *Wires* | 14 to 24 AWG |

| Discrete Input Specifications | |
|---|---|
| *Number of Inputs* | 6 Sink/Source |
| *Input Voltage Range* | 11 - 30 VDC |
| *Peak Voltage* | 40 VDC |
| *Input Current* | 1.92 mA @ 12 VDC<br>4.0 mA @ 24 VDC |
| *Maximum Input Current* | 5 mA @ 28 VDC |
| *Input Impedance* | 5.6k @ 10-28 VDC |
| *ON Voltage Level* | > 10 VDC |
| *OFF Voltage Level* | < 2 VDC |
| *Min. ON Current* | 1.5 mA |
| *Min. OFF Current* | 0.2 mA |
| *OFF to ON Response* | 2-4 ms, typical 3 ms |
| *ON to OFF Response* | 2-4 ms, typical 3 ms |
| *Status Indicators* | Red LED for Source<br>Green LED for Sinking |
| *Commons* | 1 point (Common_In) |
| *Base Power Required (5V)* | Typical 30mA (all inputs on) |
| *Optical Isolation* | 2500 Volt |
| *Wires* | 14 to 24 AWG |

| Analog Voltage Input Specifications | |
|---|---|
| *Number of Channels* | 2 single ended |
| *Input Range* | 0-5V, 0-10V, ±5V, ±10V<br>Jumper Selectable |
| *Resolution* | 12 bit (0-4095)<br>12 bit (±2047) |
| *Step Response* | 200µs to 95% of FS |
| *Crosstalk* | 1/2 count max, -80db |
| *Input Impedance* | >20KΩ |
| *Absolute Max Ratings* | ± 15V |
| *Converter Type* | successive approximation |
| *Linearity Error (end to end)* | ± 2 count |
| *Input Stability* | ± 2 count |
| *Gain Error* | ± 2 counts |
| *Offset Calibration Error* | ± 5 counts max. (Unipolar)<br>± 8 counts max. (Bipolar) |
| *Max Inaccuracy* | ± 0.2% at 25°C,<br>± 0.4% at 0-60°C |
| *Accuracy vs. Temperature* | ± 50 ppm/°C typical |

| Analog Voltage Output Specifications | |
|---|---|
| *Number of Channels* | 2 single ended |
| *Output Range* | 0-5V, 0-10V, ±5V, ±10V<br>Jumper Selectable |
| *Resolution* | 12 bit (0-4095)<br>12 bit (±2047) |
| *Conversion Setting Time* | 100 µs for FS |
| *Crosstalk* | 1/2 count max, -80db |
| *Peak Output Voltage* | ± 18 VDC |
| *Offset Error* | ± 0.15% of range |
| *Gain Error* | ± 0.3% of range |
| *Linearity Error (end to end)* | ± 1 count |
| *Output Stability* | ± 2 counts |
| *Load Impedance* | 2k Ω min. |
| *Load Capacitance* | .01 microF max |
| *Accuracy vs. Temperature* | ± 50 ppm/C typical |

Proudly Made in America


Uticor AVG Pty Ltd T: 61 2 9482 4000
W: www.ezautomation.com.au
W: www.uticor.com

# EZ I/O™ Combo Discrete and Analog Voltage Module

**EZRPL-IO-6DI4DO-2ANI2ANOV**

## Setting the Module Jumpers

The Analog Input and Output module uses jumpers for selecting the voltage for each channel. The range of each channel can be independently set. Available operating ranges are 0-5V, 0-10V, ±5V and ±10V. Standard Unipolar voltage ranges accept a data format of 0-4095 while standard Bipolar ranges accept ±2047

There are three jumpers for each channel. Install or remove these jumpers to select the desired range. Unused jumpers can be stored on a single pin so they do not get lost.

Three jumpers are placed default for 0-10V Analog Input and Output, select your desired jumper settings to either Bipolar or Unipolar input and/or output.

Note: It is important to set the module jumpers correctly. The module will not operate correctly if the jumpers are not properly set for the desired voltage ranges.

*This figure shows the jumper locations. See the below drawing to determine the proper settings for your application.*

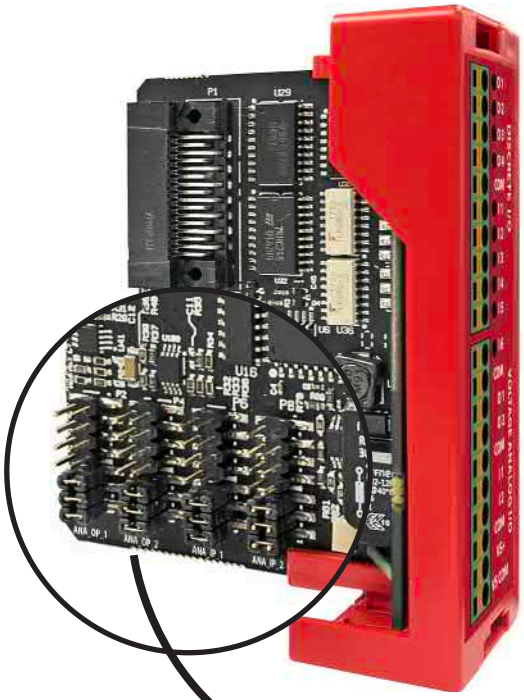

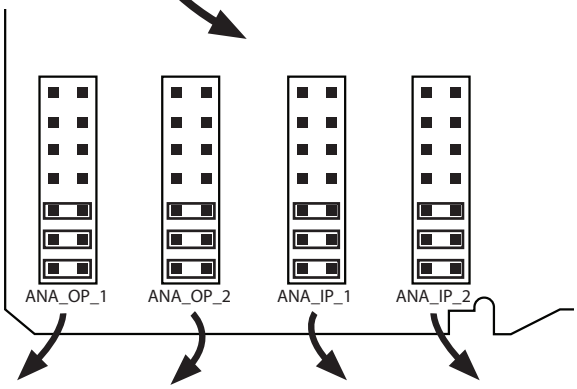


### Analog Output Jumper settings

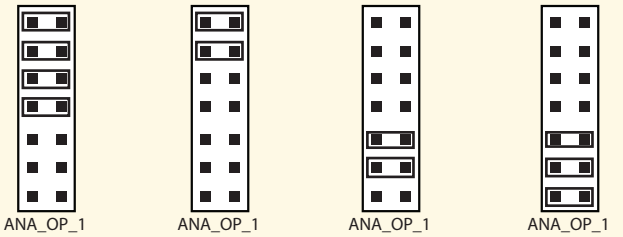


### Analog Input Jumper settings

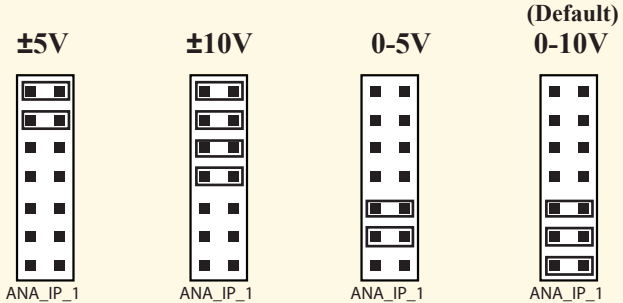


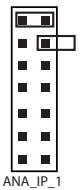


*Note: Store unused jumpers on a single pin as shown in the drawing here so they do not get lost..*

**Proudly Made in America**



Uticor AVG Pty Ltd T: 61 2 9482 4000
W: www.ezautomation.com.au
W: www.uticor.com